CHARACTERISTIC OF VALVE REGULATED DS-iGEL BATTERY

MODEL: YT9B-4(DS)

NO.:301060035-00027

Container Optional Color

Orange 021 C

Plane Chart:

Unit:(mm) Terminal type:(C9)

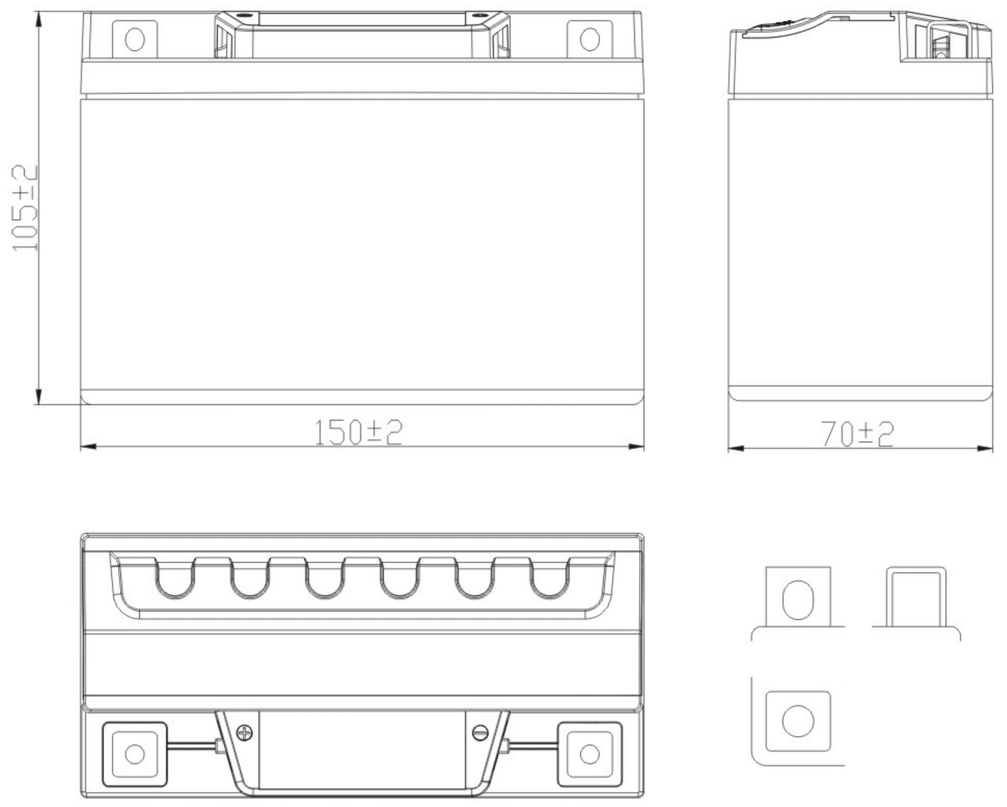

Parts:

Executed Standard:JISD 5302–2004

Cover	Container Bottom	Terminal	Positive Plate	Negative Plate	Separator	Electrolyte	Gel	Safty Valve	Seal Glue
ABS	ABS	Cu	PbO_2	Pb	AGM	dilute sulphuric acid	Fumed Silica	Rubber	Epoxy Resin

Parameter Chart:

Volts	12V	
Capacity (25°C)	10 hours rate	8Ah
Appx.Dimension (mm)	L±2	150
	W±2	70
	H±2	105
Storage Status	Wet	
Weight (Approx)	2.61Kg	
Retention of Charge Storage @25℃		
1 month	97%	Directly Mounted
3 month	90%	Directly Mounted
6 month	80%	Constant Volts:14.4V Limit Current:1.6A Charging Hours:2-3H
12 month	40%	Constant Volts:14.4V Limit Current:1.6A Charging Hours:4-6H
CCA	**Factory Standard (-10° C)**	**Factory Standard (-18° C)**
Discharging Current	70A	100A

★The above are average and data obtained from the firsr 3 charge/discharge cycles.These are not minimum values.

★The different item No.of battery can be developed according to the customer's demand.

Discharge Current 25℃

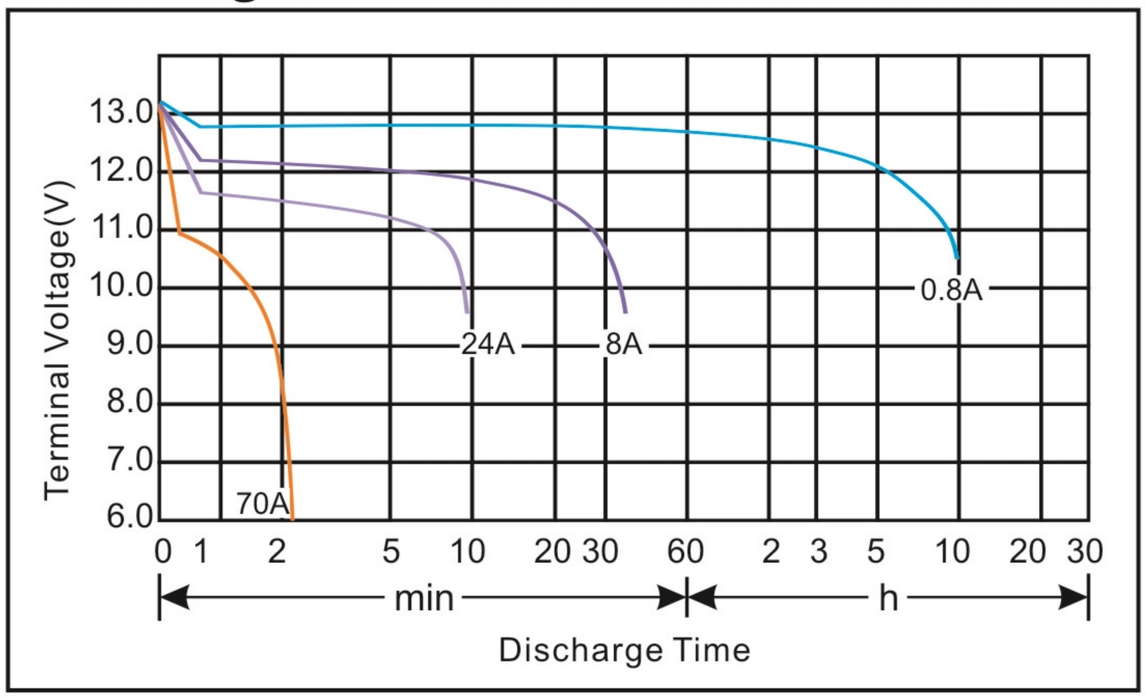

Residual Capacity

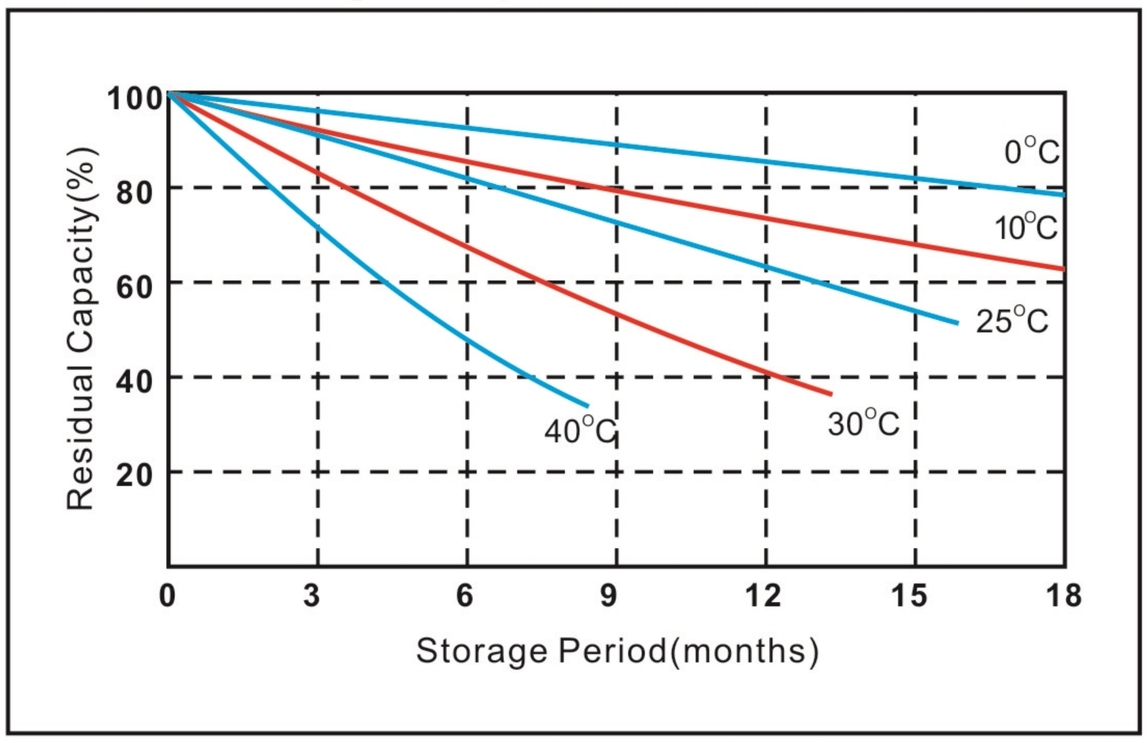

V20180601