Specification of generator set

Power Your Imagination

Shandong Superwatt Power Equipment Co.,Ltd

1 Specification of genset Model：SCM185X

Main parameters

- Prime power：134kW/168kVA
- Standby power：148kW/185kVA
- Frequency：60Hz
- Rated speed：1800r/min
- Rated Voltage：220V/127V
- Factor：0.8
- Start mode：DC24V/electrical start

Size and Weight

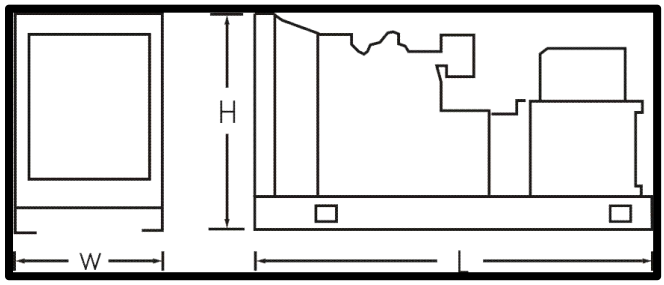

	Size L×W×H（mm）	Weight（Kg）
Open type：	2600×1100×1800	2450
Silent type:	3430×1110×2060	2910
Super silent：	4100×1300×2140	3450

Operation conditions

- Operation temp: ≤40℃
- altitude: ≤1000米
- Humidity: ≤60%

Note：

1. When the ambient temperature is higher than 40℃ or the altitude is higher than 1000 meters, the power decreases, which needs to be corrected.
2. Excessive humidity requires corresponding measures.

Remark

- Prime Power（PRP）：Refers to the unit can run continuously for 24 hours under variable load, allowing 10% overload every 12 hours for 1 hour.
- Standby power (ESP) : at an average load rate of 80%, for no more than 500 hours a year. No overload is allowed.
- Each unit has passed the load test of 0%, 25%, 50%, 75%, 100%, 110% and static, transient response capacity, all protection devices and control systems have passed strict inspection before the factory qualified
- Warranty: one year or 1000 hours from the first startup after commissioning or 18 months from shipment date (whichever comes first).

2 Specification of engine Model：QSB7-G3

Engine parameters

- Manufacturer: CUMMINS((original))
- Aspiration： Turbocharged and Aftercooled
- Cooling: Water-cooling
- No. of cylinder/arrangement: 6/in-line
- Displacement： 6. 69L
- Bore: 107mm
- Stroke: 124mm
- Compression Ratio： 17.2:1
- Rated speed： 1800r/min
- Prime/standby power: 163kW/186kW
- Dry weight： 475kg
- Governor： Electronic

Lubrication system

- capacity： 18.9L
- pressure @idle speed: 69kPa
- pressure @rated speed: 276-414Kpa

Electrical System

- Battery recharge： 24V/70A
- Min battery capacity (CCA)： 550CCA

Fuel Consumption

- standby power： 48L/h
- 100% prime power： 42L/h
- 75% prime power： 33L/h
- 50% prime power： 23L/h

Exhaust system

- Max allowable back pressure：10.2kPa

Air Induction system

Maximum Allowable Intake Air Restriction:

- With dirty Filter Element: 6.2kPa
- With Clean Filter Element: 3.7kPa

Cooling system

- Coolant capacity Engine only： 10.2L
- Standard Thermostat range：79-95℃
- Minimum Pressure Cap： 103kPa
- Maximum Allowable Temperature (Stand_by/Prime)： 112/107℃

3 Specification of alternator Model: ECP34 1L 4C

Alternator parameters

- Manufacturer: mecc alte
- Rated voltage：220V/127V
- Rated frequency：60Hz
- Power factor：0.8
- Rated power：136kW/170kVA
- Insulation class：H
- Temp. Rise class：H
- Protection：IP23
- Ambient temperature：40℃
- Altitude：≤1000m
- Overspeed：≤2250rpm

Features

- Phases：3
- Winding pitch：2/3
- Excitation system：self-excitation
- No. of Bearing：1
- Connection type：YY
- Poles：4
- Waveform Distors. (THD): <5%
- Telephone Interference (THF): <2%

4 SWT control system-standard for single unit

Note: the picture is for reference only. The specific model is subject to the formal quotation

Please refer to "SWT parallel system" if sychronising units are required.

Features

- LCD Screen, keys operation
- Multilingual display
- control and protection functions
- Engine and alternator parameter detection
- Local and remote start
- Reasonable keys layout, friendly interface
- Multiple communication interfaces available
- Event logs
- IP65 Overall

Control box（Templet）

Features

- User ID display function
- Parameters can be fully configured through PC software
- LED and LCD alarm lamps
- Magnetic sensor speed detection
- Work mode selectors (switchable)
- Preset auto start/stop cycle
- Fuel quantity detection, low oil level alarm
- Voltage measurement
- Current measurement
- Generator /mains circuit breaker control
- Plug terminal type wiring design
- Power saving mode
- Switch between generator /mains load
- Upgradeable Firmware

Operation brief

- It is controlled by start, stop, auto and manual buttons on the panel
- The user can set the data of the module through the panel button, or the setting data can be uploaded through the configuration operation software via USB interface

Advantage

- The real-time clock provides accurate event logging
- Provide free PC software license
- Advanced PCB layout ensures high quality of modules
- Modular design, excellent stablility
- Various communication interfaces available

5 ATS（Auto transfer system）optional

Function

Particular ATS controller, which combines measurement, display, control for the automatic control on mains/mains or mains/ generator system.

Note: communication function requires extra communication module. The picture is for reference only. The specific model is subject to the quotation

Features

- Microcomputer control, all digital technology
- Display the operating state of ATS and the operation mode of controller directly through the LCD screen
- Operating parameters can be input via the LCD screen and the keys of controller
- Measuring data (including voltage/frequency) through LCD screen
- PC-level switch and electromagnetic driven structure can realize fast on-load switching of two power sources (switching time ≤80ms)
- Electrical and mechanical double interlock mechanism, the main loop contact for the two static structure, the moving contact using a "V" design, from the design to ensure that the two power supply will not be shortcircuit.
- Coil control power supply can be provided by the main and standby AC or DC power supply, without additional control power supply

Case

Mains/mains

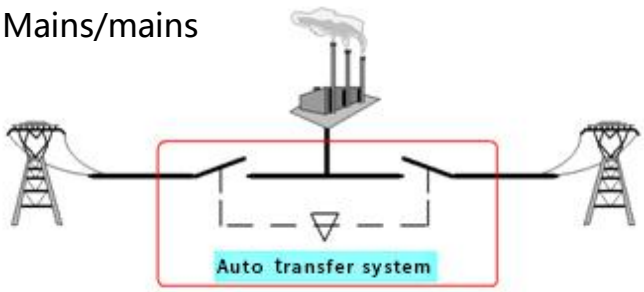

Mains/genset

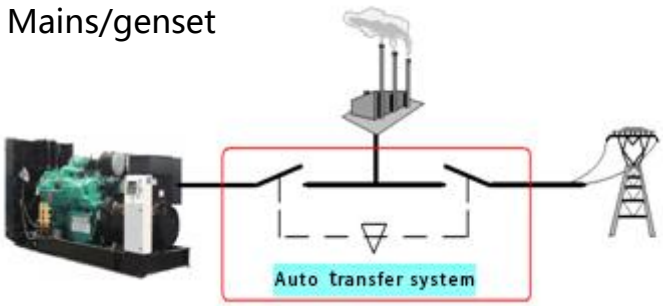

6 SWT paralleling system (Optional)

Function

SWT paralleling system is specially designed for gensets & grid system paralleling (set to set or set to grid), up to 32 units synchronise automatically, realize the automatic starting unit automatic parallel operation, and according to the load size the number of units in operation or exit the operation. When mains return to normal, the unit will automatically discharge and cooling down, the system can start paralleling mains grid, automatic transfer and PLC control load can also be customized upon customer requirements, the control of multiple load and multiplex mains SWT paralleling system can also be used with ATS.

Features

- SWT paralleling system comprises international famous brand controller. PLC system, touch screen etc are available upon customer requests
- Integrated with advanced control technology, perfect function, safe, durability and reliability.
- Smart and flexible, one machine one screen, the unit can be used independently or parallelly
- Easy to operate, fully automatic, Chinese and English operating system, built-in fault detection
- The system can automatically input the appropriate number of units according to the load size to avoid the operation of high-power units with small load and realize the off- peak control
- Easy to expand capacity, just install the required power units, convenient to add units for the expansion in the future.

Case

Genset to Genset

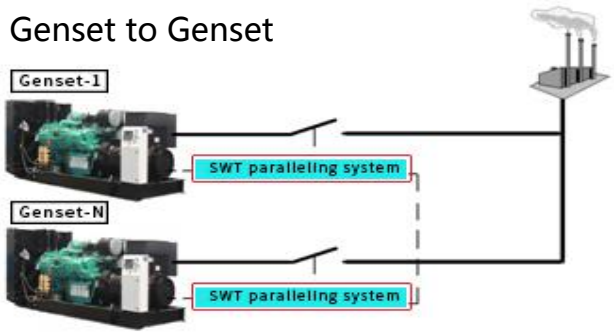

Gensets to grid

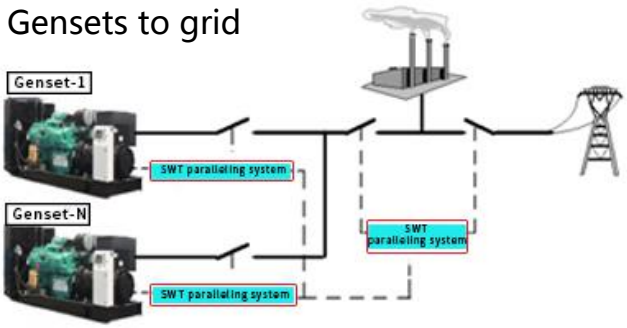

Paralleling with ATS

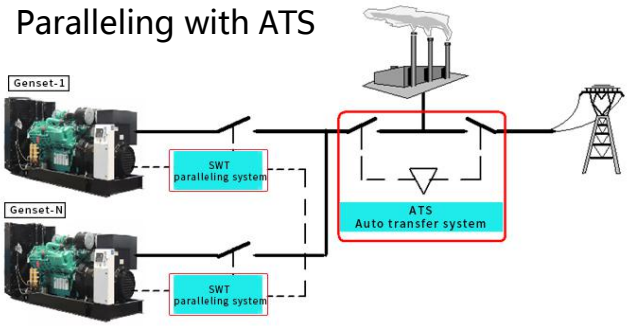

7 Accessories list

Standard accessories

- Engine
- Alternator
- Chassis
- Control box
- Controller for single unit
- Circuit breaker (up to 1200kW)
- Industrial muffler
- Flange of muffler
- Bellow joint
- Shock absorber
- Base tank（up to 200kW)
- Test report
- Certificate of quality
- Schematic diagram
- Installation manual
- Operation manual

Optional accessories

- ☐ Daily fuel tank/bulk fuel tank
- ☐ Residential silencer
- ☐ Power cable
- ☐ Anti condensation heater (alternator)
- ☐ battery charger
- ☐ Water jacket heater
- ☐ Oil heater
- ☐ Fuel level sensor
- ☐ Auto oil make-up device
- ☐ Auto fuel filling device
- ☐ Soundproof enclosure
- ☐ Containerized enclosure
- ☐ Trailer

- ⭘ Exhaust pipe
- ⭘ Hot air discharge duct
- ⭘ RS485 extension module
- ⭘ Ethernet communication
- ⭘ Cloud monitor
- ⭘ ATS panel
- ⭘ Motorized circuit breaker
- ⭘ Synchronizing system
- ⭘ Spare parts

Deepsea controller
- ⭘ DSE6020
- ⭘ DSE7320
- ⭘ DSE8610
- ⭘ DSE8620
- ⭘ DSE8660

ComAp controller
- ⭘ MRS16
- ⭘ AMF25
- ⭘ IG200
- ⭘ IG-NTC
- ⭘ IM-NT

Smartgen controller
- ⭘ HGM4010
- ⭘ HGM4020
- ⭘ HGM6110
- ⭘ HGM6120
- ⭘ HGM9510
- ⭘ HGM9520

SWT reserves the right to change technical data or modify this document without prior notice. This document cannot be reprinted without the permission of SWT.
For further information, please visit http://www.swt.cn/

Hotline：0086-537-2780018
E-mail：info@swt.cn
Add: 7th Industry Park, Jining Hi-Tech Zone, Shandong, China. PC: 272104